PLANT LIST

SYM	QTY	BOTANICAL NAME	COMMON NAME	HT./SPREAD	CALIPER	ROOT	MIN. ROOT BALL DIA.	COMMENTS
DECIDUOUS SHADE TREES AND ORNAMENTAL TREES								
AR	4	Acer rubrum 'October Glory'	October Glory Red Maple	14'-16' HT.	2 1/2" - 3" cal.	B&B	28"	Limb to 7' ht.
BN	2	Betula nigra 'Heritage'	Heritage River Birch	10-12' HT.	-	B&B	32"	Multistem, 3 trunks min.
LI	2	Liquidambar styraciflua 'Rotundiloba'	Sweet Gum	14'-16' HT.	2 1/2" - 3" cal.	B&B	28"	Limb to 7' ht., fruitless cultivar
NS	2	Nyssa sylvatica 'Wildfire'	Wildfire Black Gum	12'-14' HT.	2 1/2" - 3" cal.	B&B	28"	Limb to 7' ht.
EVERGREEN TREES								
TO	8	Thuja occidentalis 'Nigra'	Dark American Arborvitae	6'-7' HT.	—	B&B	20"	
SHRUBS								
IG	13	Ilex glabra 'Shamrock'	Shamrock Inkberry Holly (dwarf)	24-30" HT.	—	B&B	14"	
MP	7	Myrica pensylvanica	Northern Bayberry	3'-4' HT.	—	B&B	16"	5 canes min.
PF	24	Potentilla fruticosa 'Goldfinger'	Goldfinger Shrubby Cinquefoil	18"-24" HT.	—	Cont.	10"	4 canes min.
VD	8	Viburnum dentatum 'Blue Muffin'	Blue Muffin Arrowwood Viburnum	3'-4' HT.	—	B&B	16"	5 canes min.
PERENNIALS, ORNAMENTAL GRASSES & GROUNDCOVER								
ES	56	Eragrostis spectabilis	Purple Lovegrass	—	—	Cont.	1 Gal.	24" O.C. spacing
JC	37	Juniperus communis var. depressa 'AmiDak'	Blueberry Delight Common Juniper	—	—	Cont.	2 Gal.	24" O.C. spacing
RF	22	Rudbeckia fulgida 'Goldsturm'	Goldsturm Black-Eyed Susan	—	—	Cont.	1 Gal.	24" O.C. spacing
SA	38	Sisyrinchium angustifolium 'Lucerne'	Lucerne Blue-Eyed Grass	—	—	Cont.	1 Gal.	18" O.C. spacing
RAIN GARDEN PLANTING								
AT	14	Asclepias tuberosa	Butterfly Milkweed	—	—	Cont.	1 Gal.	24" O.C. spacing
ET	18	Eutrochium dubium 'Little Joe'	Dwarf Joe Pye Weed	—	—	Cont.	1 Gal.	24" O.C. spacing
LS	19	Liatris spicata	Blazing Star	—	—	Cont.	1 Gal.	24" O.C. spacing
PV	12	Panicum virgatum 'Shenandoah'	Shenandoah Switchgrass	—	—	Cont.	2 Gal.	
SS	15	Solidago sempervirens	Seaside Goldenrod	—	—	Cont.	1 Gal.	24" O.C. spacing
BUFFER RESTORATION PLANTING								
AM	10	Aronia melanocarpa	Black Chokeberry	18"-24" HT.	—	Cont.	10"	4 canes min.
CA	7	Clethra alnifolia	Summersweet Clethra	18"-24" HT.	—	Cont.	10"	4 canes min.
CO	10	Cornus amomum	Silky Dogwood	18"-24" HT.	—	Cont.	10"	4 canes min.

PLANTING NOTES:

1. LOCATE AND VERIFY ALL EXISTING UTILITY LINES PRIOR TO PLANTING AND REPORT ANY CONFLICTS TO THE OWNER'S REPRESENTATIVE.
2. ALL NEW PLANT MATERIAL SHALL CONFORM TO THE MINIMUM GUIDELINES ESTABLISHED FOR NURSERY STOCK PUBLISHED BY THE AMERICAN ASSOCIATION OF NURSERYMEN. IN ADDITION, ALL NEW PLANT MATERIAL FOR THE PROJECT SHALL BE OF SPECIMEN QUALITY.
3. ALL NEW WOODY STEM PLANTS SHALL BE BALLED AND BURLAPPED OR CONTAINER GROWN, UNLESS OTHERWISE NOTED ON THE PLANS.
4. THE CONTRACTOR SHALL SUPPLY ALL NEW PLANT MATERIAL IN QUANTITIES SUFFICIENT TO COMPLETE THE PLANTING SHOWN ON THE PLANS. IF MINOR DISCREPANCIES EXIST BETWEEN THE NUMBER OF PLANTS DRAWN ON THE PLANTING PLAN AND THE NUMBER OF PLANTS IN THE PLANT LIST, THE PLANTING PLAN SHALL GOVERN.
5. NO PLANT MATERIAL SHALL BE PLANTED BEFORE ACCEPTANCE OF ROUGH GRADING. PLANTS SHALL BEAR SAME RELATIONSHIP TO NEW FINISHED GRADE AS THEY BORE TO FINISHED GRADE BEFORE BEING DUG IN THE NURSERY. PRIOR TO PLANTING, REMOVE THE TOP OF THE BURLAP AND CONFIRM THAT PLANT ROOT CROWNS ARE NOT COVERED BY SOIL FROM THE NURSERY.
6. STAKE LOCATION OF ALL PROPOSED PLANTING FOR APPROVAL BY THE OWNER'S REPRESENTATIVE PRIOR TO COMMENCEMENT OF PLANTING.
7. ALL NEW PLANT MATERIAL SHALL BE GUARANTEED BY THE CONTRACTOR FOR ONE YEAR FROM TIME OF WRITTEN ACCEPTANCE OF THE PROJECT.
8. ALL AREAS DISTURBED BY CONSTRUCTION OPERATIONS INSIDE AND OUTSIDE THE LIMIT OF WORK SHALL BE LOAMED AND SEEDED AS SPECIFIED, UNLESS OTHERWISE REQUIRED BY THE OWNER'S REPRESENTATIVE.
9. ALL AREAS TO BE SEEDED SHALL RECEIVE SOIL PREPARATION PRIOR TO SEEDING AS SPECIFIED, UNLESS OTHERWISE NOTED ON THE PLAN.
10. STOCKPILED ONSITE SOIL MAY BE REUSED FOR SEEDING AND PLANTING LOAM AFTER IT HAS BEEN TESTED FOR CONFORMANCE TO THE SOIL PREPARATION SPECIFICATION AND AMENDED ACCORDING TO THE APPROVED TEST REPORT AND THE APPROVED SOIL SUBMITTAL.
11. SEED MIXES - GENERAL INFORMATION (SEE SPECIFICATIONS FOR DETAILS):
    - MEADOW SEEDING - SEED MIX SHALL BE "NEW ENGLAND SHOWY WILDFLOWER MIX" AS SUPPLIED BY NEW ENGLAND WETLAND PLANTS, INC. OR APPROVED EQUAL.
    - CONSERVATION SEEDING - SEED MIX SHALL BE "NEW ENGLAND CONSERVATION/WILDLIFE MIX" AS SUPPLIED BY NEW ENGLAND WETLAND PLANTS, INC. OR APPROVED EQUAL.
    - RAIN GARDEN SEEDING - SEED MIX SHALL BE A CUSTOM BLEND OF RIVERBANK WILD RYE, BLUE VERVAIN, NODDING BUR MARIGOLD, HOLLOW-STEM JOE PYE WEED, BONESET, NEW ENGLAND ASTER, WOOL GRASS, AND SOFT RUSH.

LANDSCAPE LEGEND

SYMBOL	DESCRIPTION	REF.
	METAL BENCH	1 / L 2.1
	SALVAGED GRANITE BENCH	3 / L 2.1
	ADA TABLE	2 / L 2.1
	BICYCLE PARKING	4 / L 2.1
	PROPOSED DECIDUOUS SHADE TREE	1,2 / L 2.2
	PROPOSED ORNAMENTAL TREE	1,2 / L 2.2
	PROPOSED EVERGREEN TREE	4 / L 2.2
	PROPOSED SHRUBS & ORNAMENTAL GRASSES	3 / L 2.2
	PROPOSED PERENNIALS, ORNAMENTAL GRASSES AND GROUNDCOVER	5 / L 2.2
	MEADOW SEEDING	6 / L 2.2
	RAIN GARDEN SEEDING	6 / L 2.2
	CONSERVATION SEEDING	6 / L 2.2

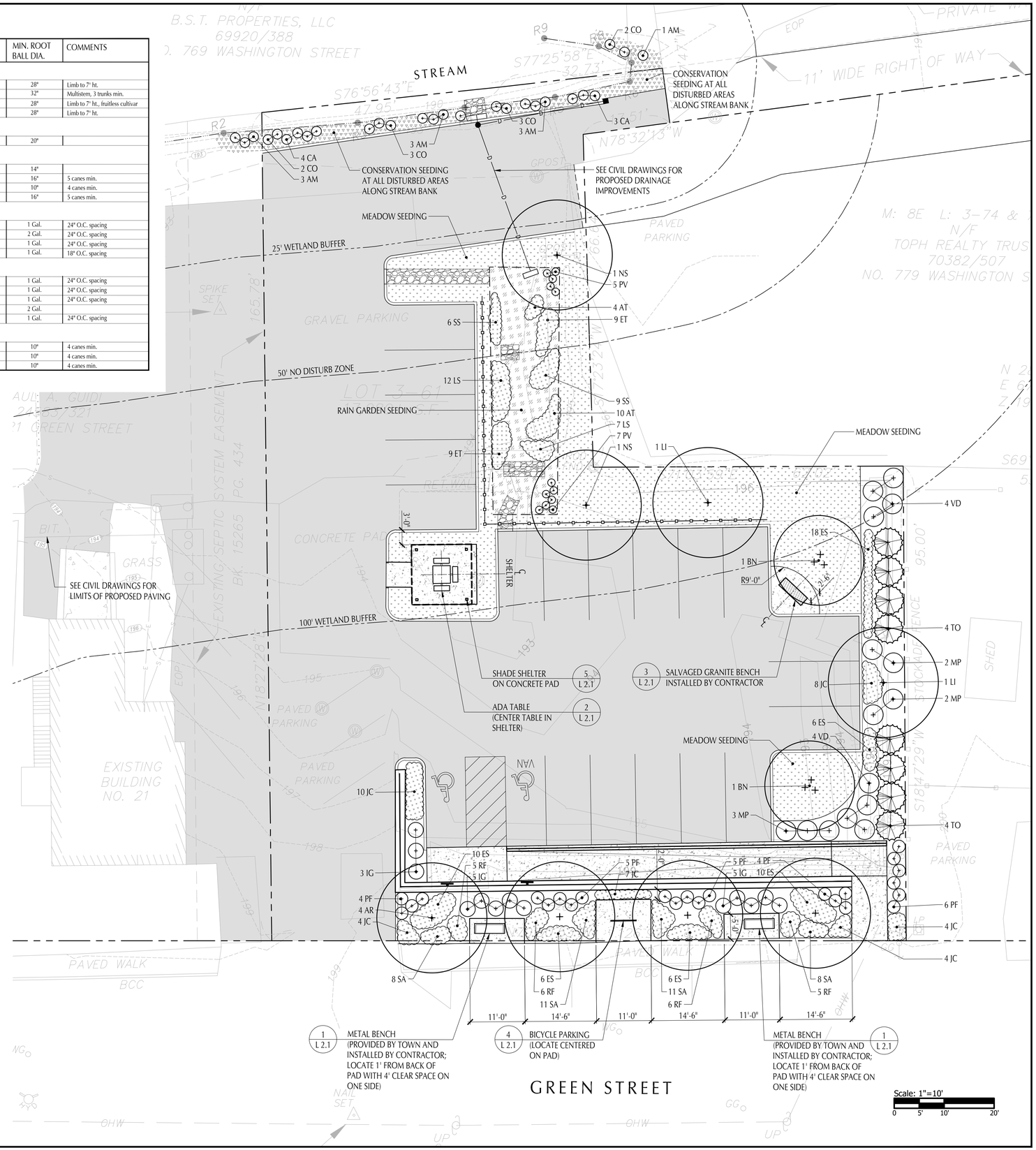

PARE
PARE CORPORATION
ENGINEERS - SCIENTISTS - PLANNERS
8 BLACKSTONE VALLEY PLACE
LINCOLN, RI 02865
401-334-4100

Shadley Associates
Landscape Architects / Site Planning Consultants
1730 Massachusetts Ave. • P 781.652.8809
Lexington, MA 02420 • F 781.862.2687
www.shadleyassociates.com

SCALE ADJUSTMENT GUIDE
0" 1"
BAR IS ONE INCH ON ORIGINAL DRAWING

Town of Holliston
9 Green Street
Holliston, Massachusetts

FOR PERMITTING ONLY

NOT FOR CONSTRUCTION

REVISIONS:

PROJECT NO.:	20212.00
DATE:	NOVEMBER 2022
SCALE:	AS NOTED
DESIGNED BY:	SC
CHECKED BY:	SC
DRAWN BY:	RJ
APPROVED BY:	PS

DRAWING TITLE:

LANDSCAPE SITE PLAN

DRAWING NO.:

L 1.1

SHEET NO. 1 OF 3

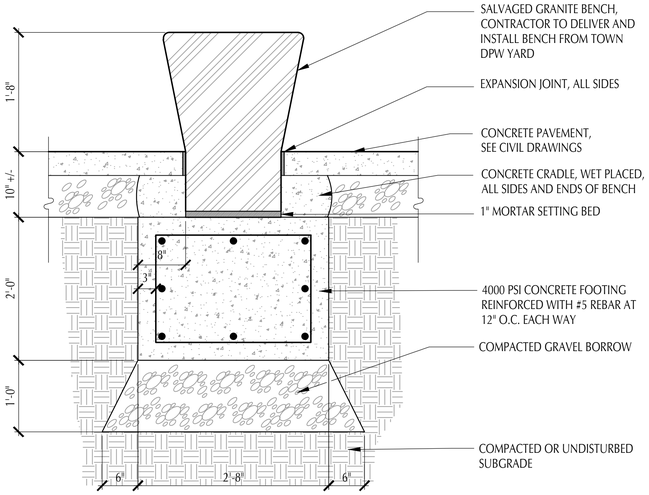

SECTION

NOTE: SALVAGED GRANITE BENCH IS APPROXIMATELY 6' LONG X 2' WIDE X 1'-8" TALL WHEN INSTALLED. CONTRACTOR TO VERIFY DIMENSIONS.

PHOTO OF SALVAGED GRANITE BENCH

3 SALVAGED GRANITE BENCH

SCALE: 1"=1'-0"

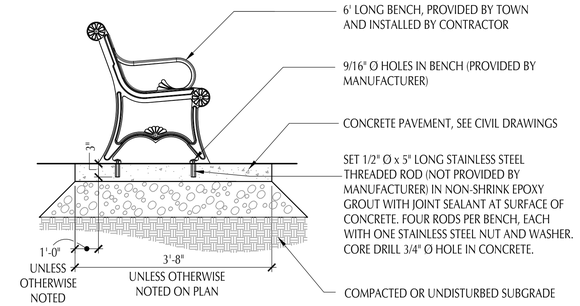

1 METAL BENCH

SCALE: 3/4"=1'-0"

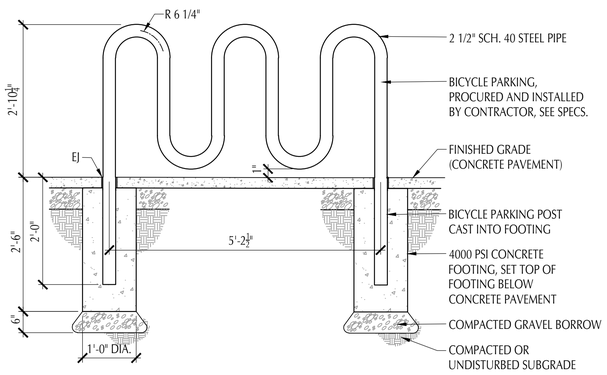

4 BICYCLE PARKING

SCALE: 3/4"=1'-0"

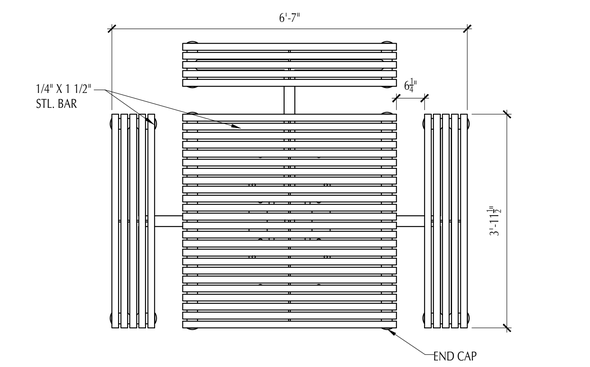

2 ADA TABLE

SCALE: 3/4"=1'-0"

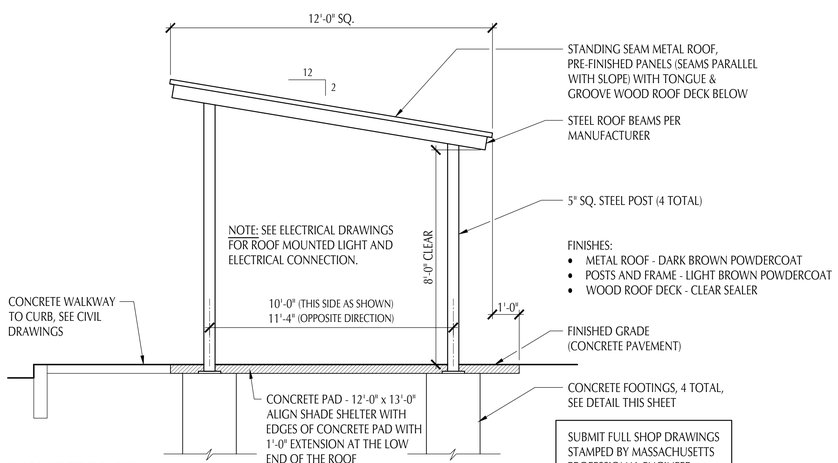

SHADE SHELTER ELEVATION
SCALE: 3/8 " = 1'-0"

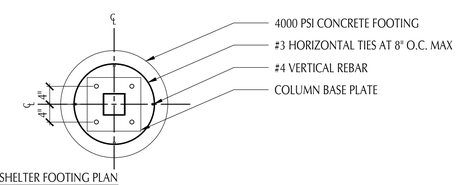

SHADE SHELTER FOOTING PLAN
SCALE: 3/4" = 1'-0"

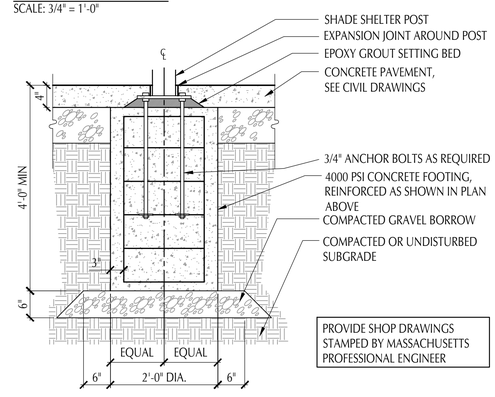

SHADE SHELTER FOOTING SECTION
SCALE: 3/4" = 1'-0"

5 SHADE SHELTER

SCALE: AS NOTED

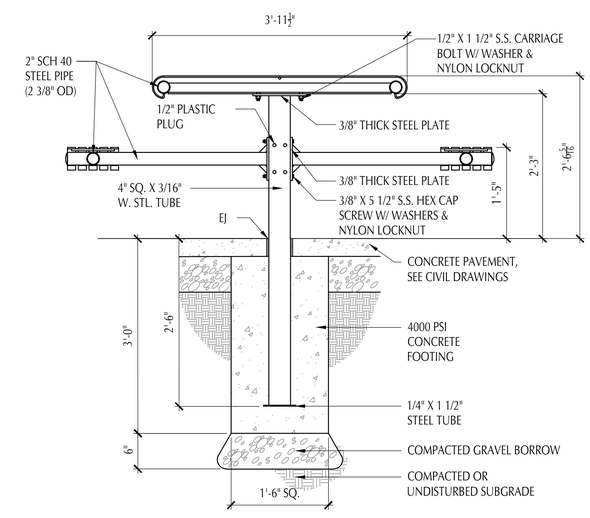

PARE
PARE CORPORATION
ENGINEERS - SCIENTISTS - PLANNERS
8 BLACKSTONE VALLEY PLACE
LINCOLN, RI 02865
401-334-4100

Shadley Associates
Landscape Architects / Site Planning Consultants
1730 Massachusetts Ave. • P 781.652.8809
Lexington, MA 02420 • F 781.862.2687
www.shadleyassociates.com

SCALE ADJUSTMENT GUIDE
0" 1"
BAR IS ONE INCH ON ORIGINAL DRAWING

Town of Holliston
9 Green Street
Holliston, Massachusetts

FOR PERMITTING ONLY

NOT FOR CONSTRUCTION

REVISIONS:

PROJECT NO.:	20212.00
DATE:	NOVEMBER 2022
SCALE:	AS NOTED
DESIGNED BY:	SC
CHECKED BY:	SC
DRAWN BY:	RJ
APPROVED BY:	PS

DRAWING TITLE:

LANDSCAPE DETAILS 1

DRAWING NO.:

L 2.1

SHEET NO. 2 OF 3

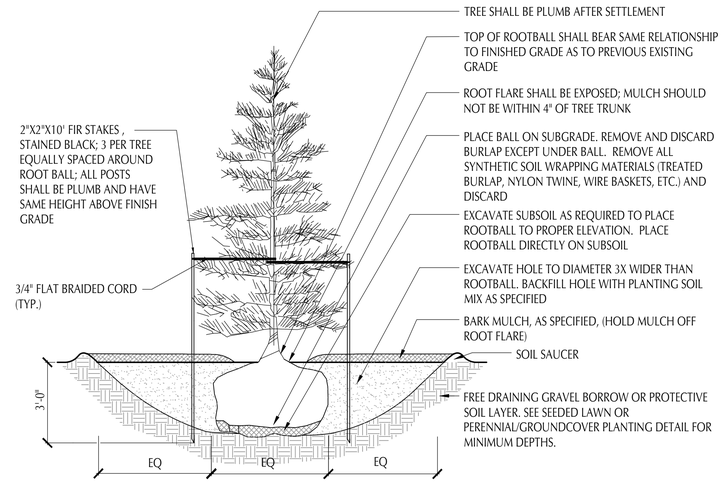

4 EVERGREEN TREE PLANTING

SCALE: 3/8"=1'-0"

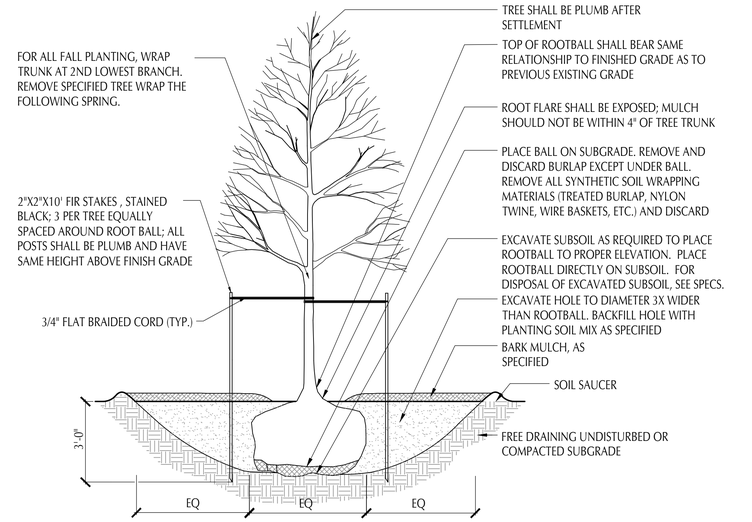

1 DECIDUOUS TREE PLANTING

SCALE: 3/8"=1'-0"

NOTE: DO NOT INSTALL BARK MULCH AT RAIN GARDEN PLANTING.

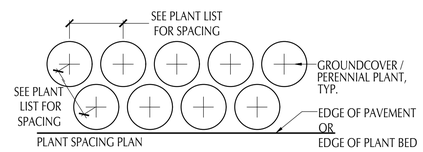

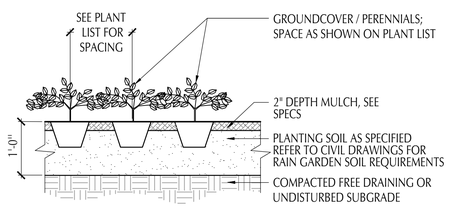

5 PERENNIAL, ORNAMENTAL GRASS & GROUNDCOVER PLANTING

SCALE: 3/4"=1'-0"

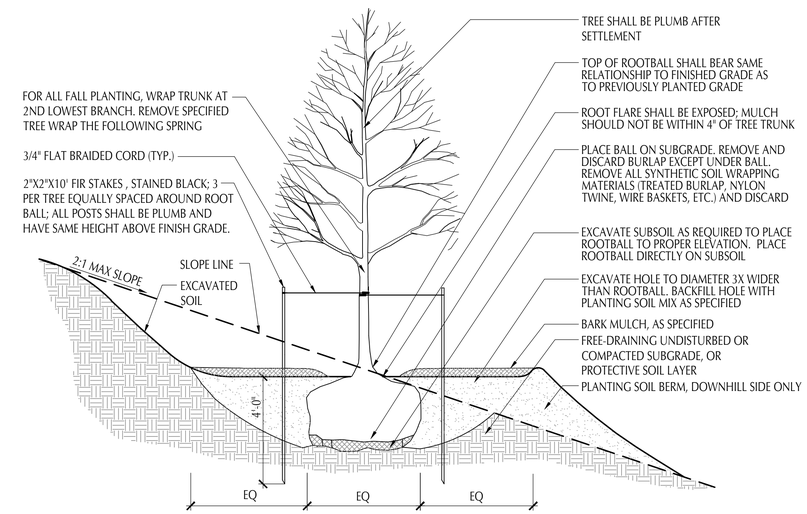

2 DECIDUOUS TREE PLANTING ON SLOPE

SCALE: 3/8"=1'-0"

NOTE: FOR RAIN GARDEN SEEDING, REFER TO BIORETENTION DETAIL ON CIVIL DRAWINGS FOR SOIL DEPTH AND SOIL SPECIFICATION.

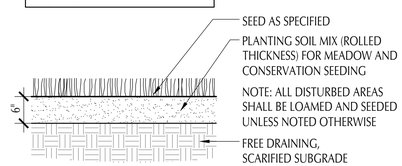

6 MEADOW, CONSERVATION & RAIN GARDEN SEEDING

SCALE: 3/4"=1'-0"

NOTE: FOR BUFFER RESTORATION PLANTING, SHRUBS SHALL RECEIVE INDIVIDUAL MULCH SAUCERS, 2" DEPTH, 18" DIA.

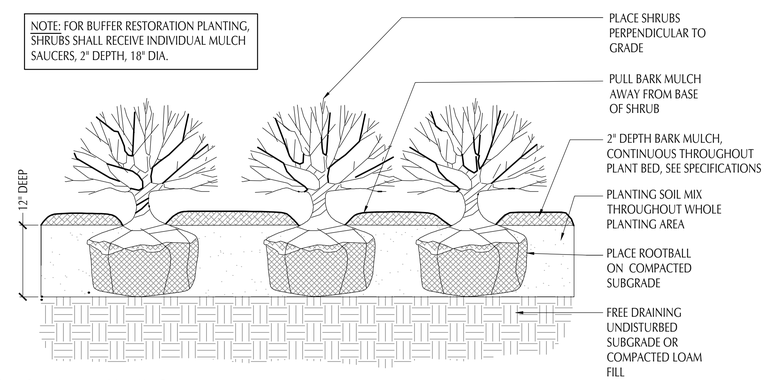

3 SHRUB PLANTING

SCALE: 1"=1'-0"

PARE
PARE CORPORATION
ENGINEERS - SCIENTISTS - PLANNERS
8 BLACKSTONE VALLEY PLACE
LINCOLN, RI 02865
401-334-4100

Shadley Associates
Landscape Architects / Site Planning Consultants
1730 Massachusetts Ave. • P 781.652.8809
Lexington, MA 02420 • F 781.862.2687
www.shadleyassociates.com

SCALE ADJUSTMENT GUIDE
0" 1"
BAR IS ONE INCH ON ORIGINAL DRAWING

Town of Holliston
9 Green Street
Holliston, Massachusetts

FOR PERMITTING ONLY

NOT FOR CONSTRUCTION

REVISIONS:

PROJECT NO.:	20212.00
DATE:	NOVEMBER 2022
SCALE:	AS NOTED
DESIGNED BY:	SC
CHECKED BY:	SC
DRAWN BY:	RJ
APPROVED BY:	PS

DRAWING TITLE:

LANDSCAPE DETAILS 2

DRAWING NO.:

L 2.2

SHEET NO. 3 OF 3